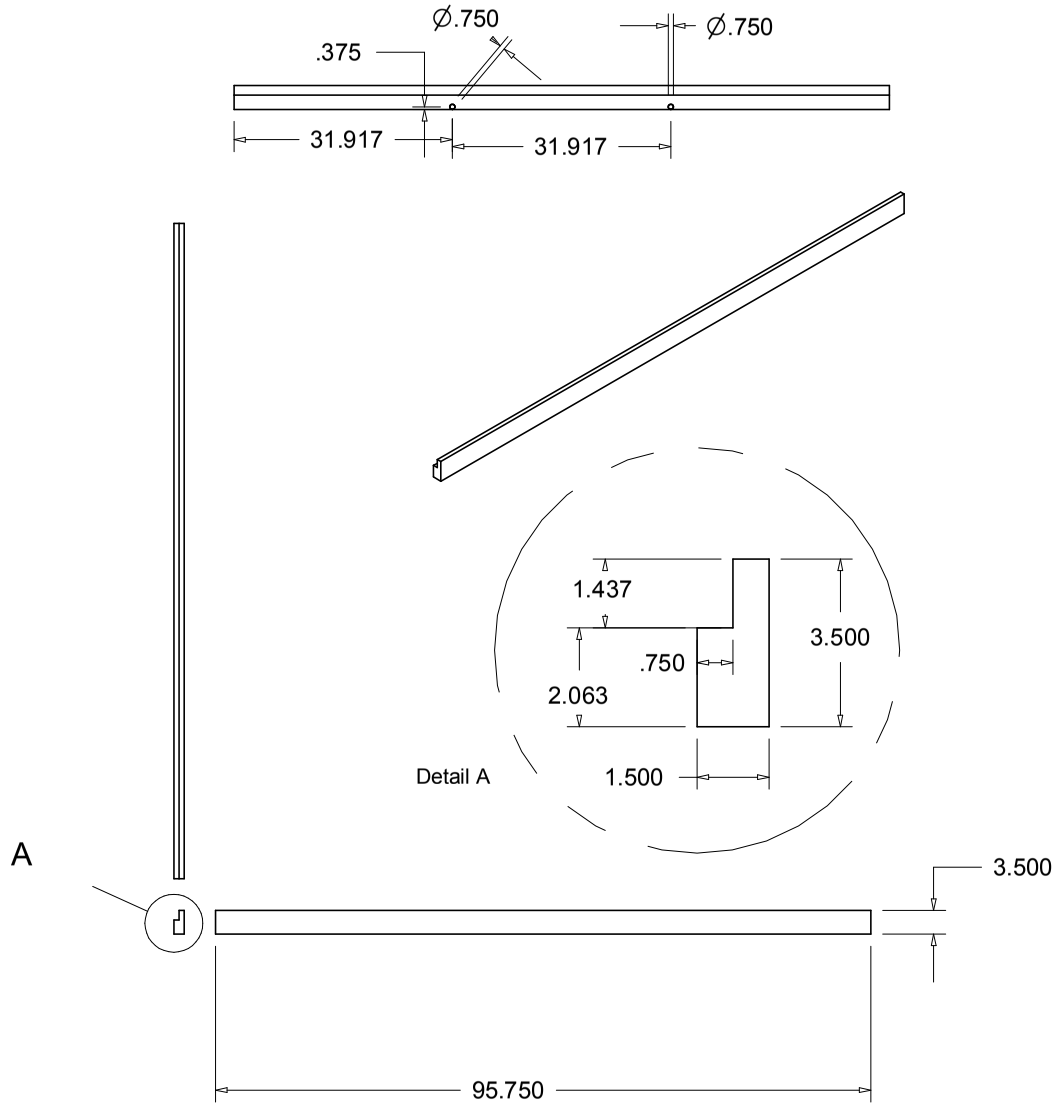

2 x 4 for left and right sides for 7/16" plywood