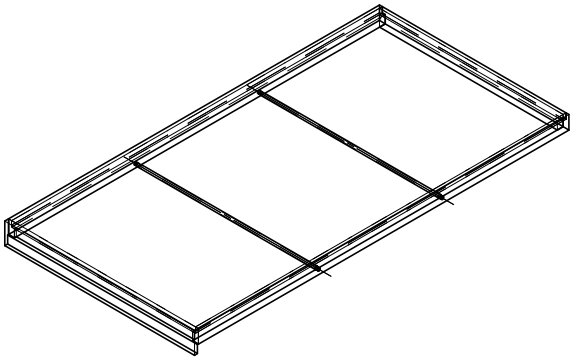

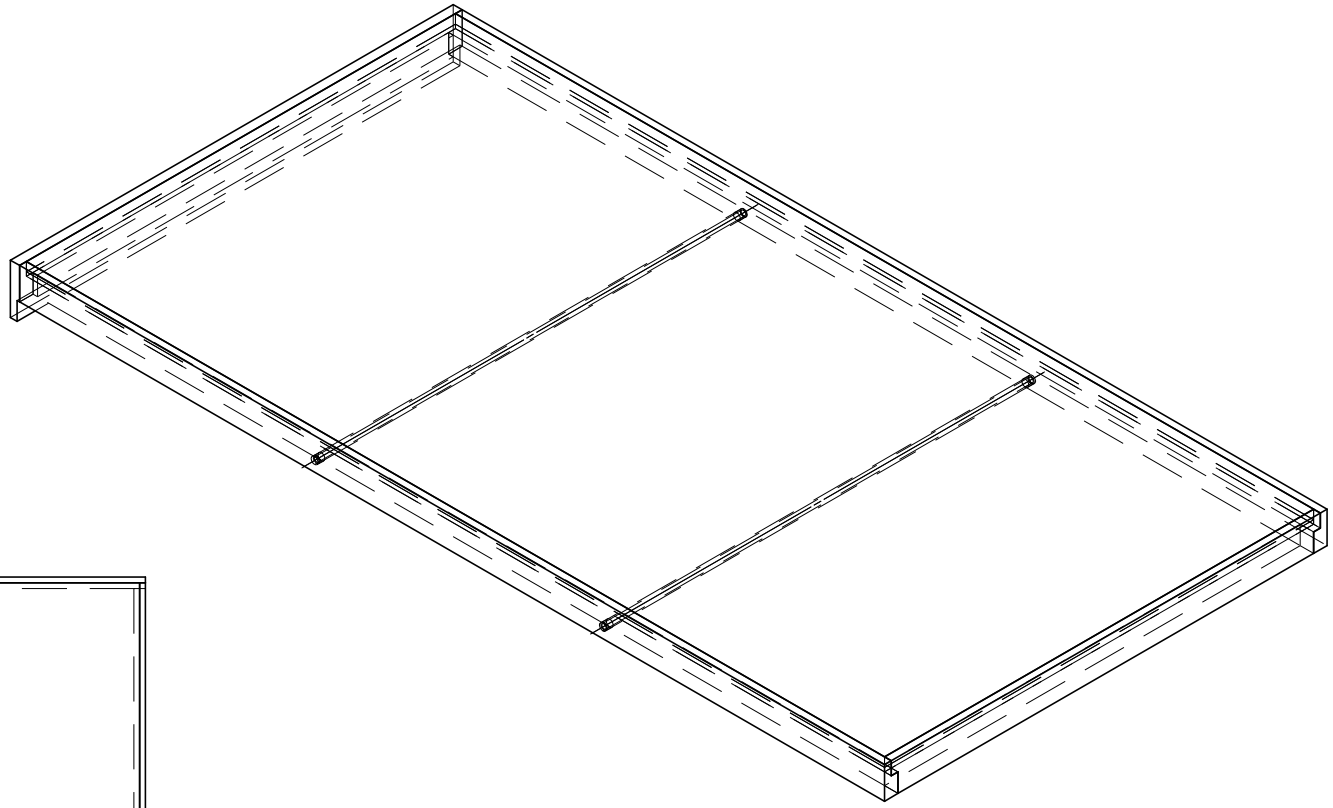

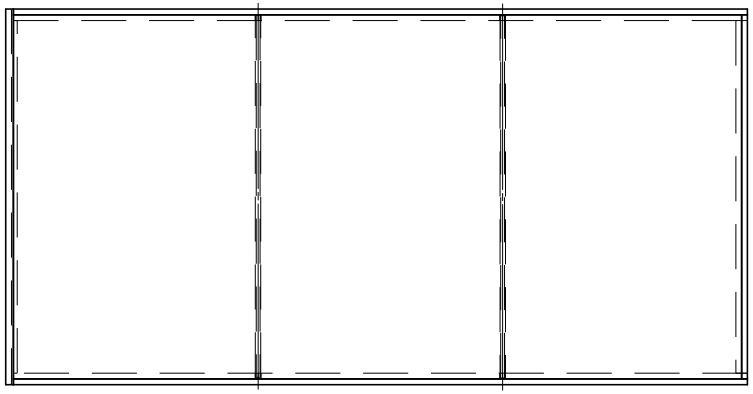

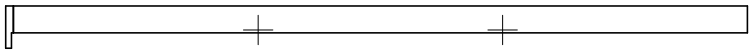

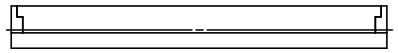

Solar Collector Frame, Insulation, Plywood (7/16"), and supports